Diritti riservati All rights reserved

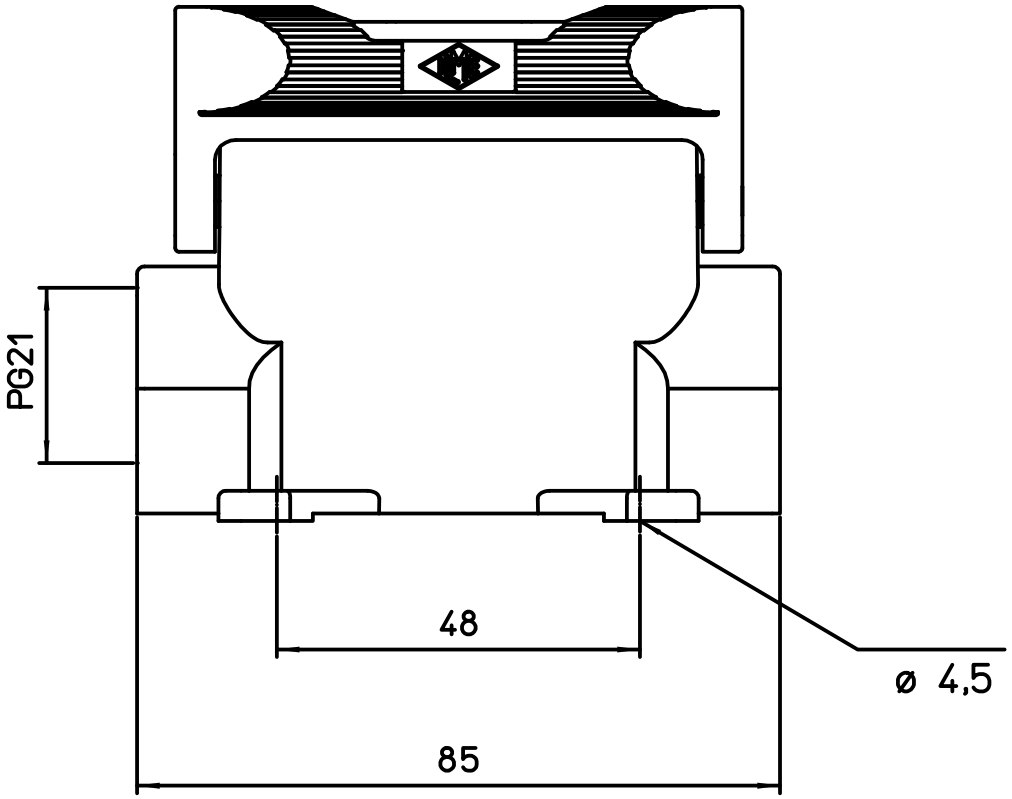

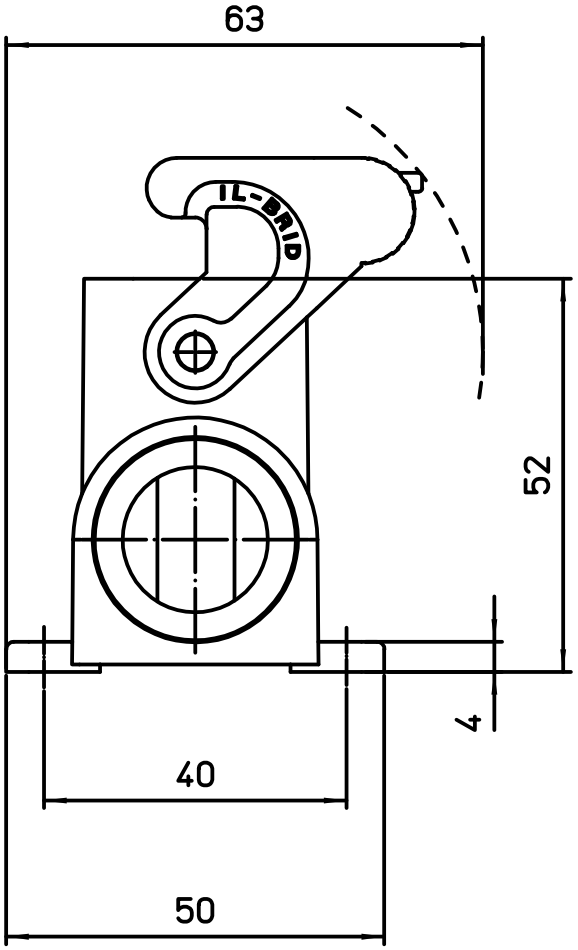

dimensions in mm	CZP 15 L21	Scale
Date 14/05/15	Surface mounting housing 1 lev. PG21	1:1
Sign. M.Pezzimenti		